Paxton	TITLE DRL-0003 - Energy saving reader drilling template			
	SCALE 1:1	UNITS mm	REV B	A4

Please note : Check the correct scale of print outs as your printer may cause inaccuracies

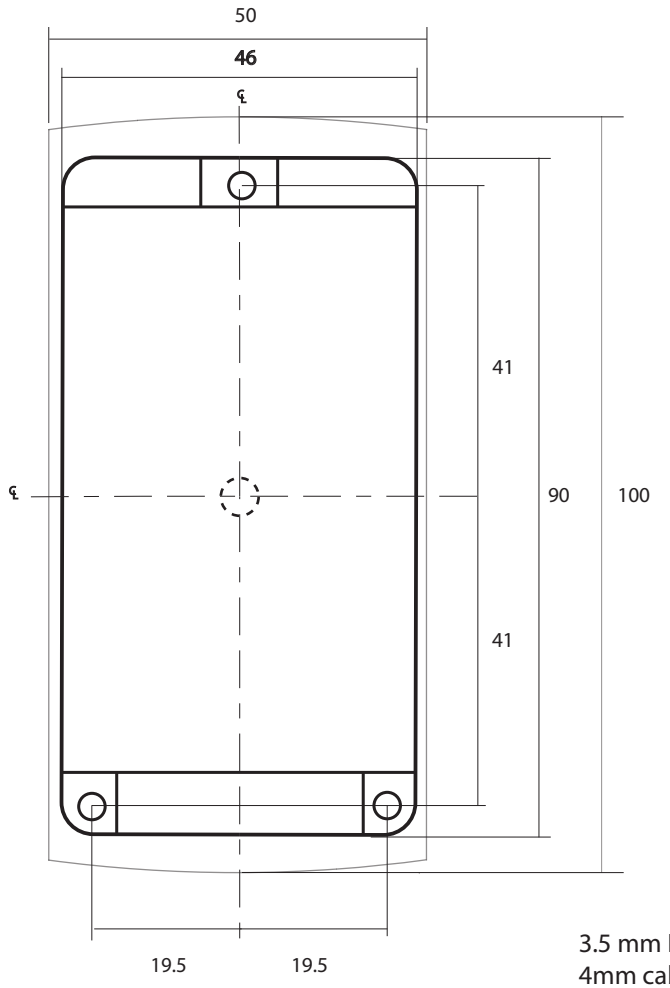

3.5 mm Holes x 3
4mm cable