Ins-30150-EX Net2 Caller ID reader

For technical help please contact your distributor

A list of distributors can be found on our website at - http://paxton.info/508

Documentation on all Paxton products can be found on our website - http://www.paxton.co.uk/

support@paxton.co.uk

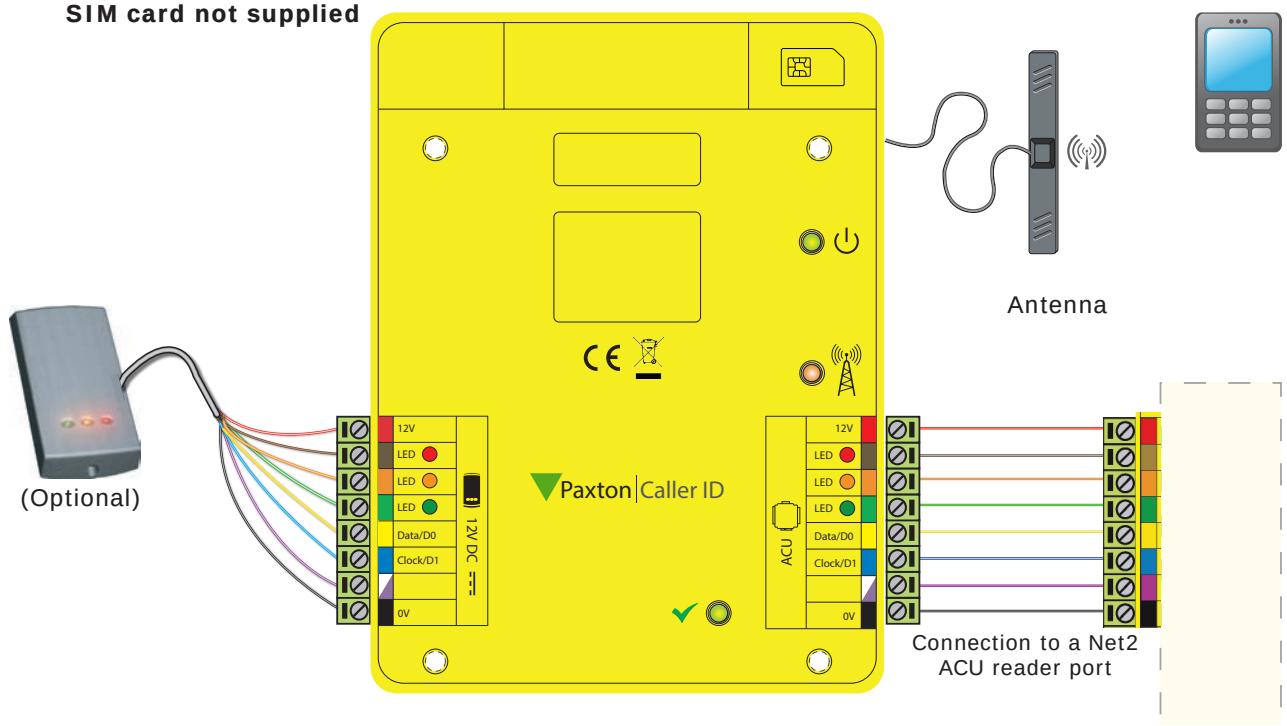

LED indications

Power	-	12v DC supply OK
Network	-	Connected to the Mobile phone network
Activity	-	The reader is receiving data from a mobile phone

Installation

You will need to obtain a SIM that is compatible with your national network. Use the website details provided with the SIM to confirm their contract details and service charges and then register your SIM.

Once registered, the SIM will be provided with the Phone number that you will call to access the Caller ID reader.

Insert the SIM card in its holder at the top right of the unit.

A drilling template for the plastic housing is available at < http://paxton.info/1715 >

If the device is to be installed where the mobile signal may be low, the antenna should be installed externally.

Secure the antenna by:
1. Internal - Remove the peel off paper from the adhesive strip and fix within the enclosure.
2. Externally - Disconnect the SMA screw connection and route the cable through any of the cabinet push-out plugs and fix to a smooth surface.

Wire the Caller ID reader colour for colour to a Net2 ACU reader port within a maximum cable length of 15 metres. Belden 9540 is recommended for all data cable wiring.

If a token reader is also fitted, it is connected to the Caller ID's own reader port within a maximum cable length to the Net2 ACU of 100 metres.

Power up the unit and confirm that the Power LED comes on. The Network LED will come on within a few minutes once the unit is active on its GSM network.

Adding the user's phone to a Net2 user record

Set the reader operating mode in the Net2 software to 'Paxton Reader' and the Operating mode to 'Token only'

Enter the last 8 digits of the phone number into the Net2 user record as the token number.
A phone number of 0777 123 456 becomes 77123456 as a Net2 token.

Specifications			
Features	Min	Max	
Phones supported			Caller ID enabled
Carrier frequency			Quad band GSM
Electrical			
Voltage - Reader module	10V DC	14V DC	
Current - Reader module		500 mA	
Additional power supply required			No
Cable length between ACU and Caller ID reader		15 m	
Environment			
Operating temperature	- 20 °C	+ 55 °C	
Waterproof			No
Dimensions	Width	Height	Depth
	200 mm	200 mm	75 mm

CE

The declaration of conformity is available on request. Contact details are provided at: http://paxton.info/596
Paxton Access Ltd hereby declares that this product is in conformity with all the essential requirements of Directive 1999/5/EC. This equipment is intended for use in all EU and EFTA countries and all other countries worldwide.

Ins-30150-EX Net2 Caller ID reader

For technical help please contact your distributor

A list of distributors can be found on our website at - http://paxton.info/508

Documentation on all Paxton products can be found on our website - http://www.paxton.co.uk/

support@paxton.co.uk

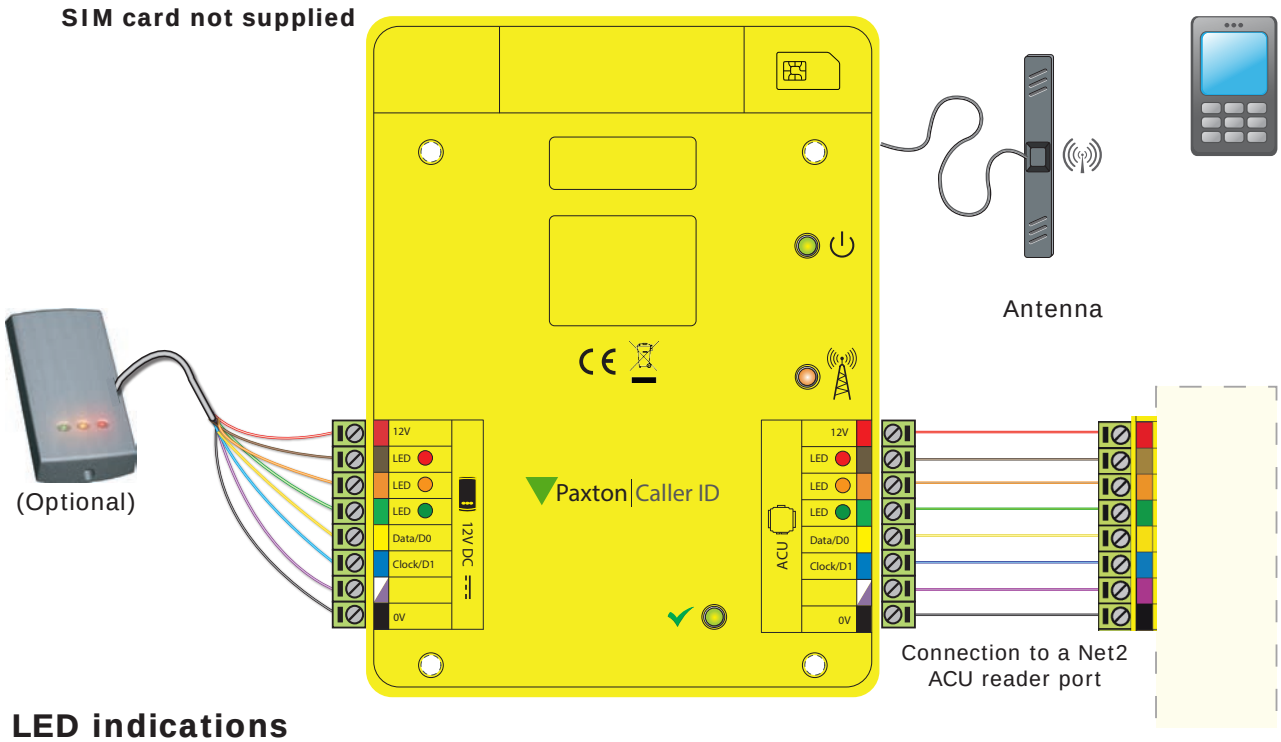

LED indications

Power	-	12v DC supply OK
Network	-	Connected to the Mobile phone network
Activity	-	The reader is receiving data from a mobile phone

Installation

You will need to obtain a SIM that is compatible with your national network. Use the website details provided with the SIM to confirm their contract details and service charges and then register your SIM.

Once registered, the SIM will be provided with the Phone number that you will call to access the Caller ID reader.

Insert the SIM card in its holder at the top right of the unit.

A drilling template for the plastic housing is available at < http://paxton.info/1715 >

If the device is to be installed where the mobile signal may be low, the antenna should be installed externally.

Secure the antenna by:
1. Internal - Remove the peel off paper from the adhesive strip and fix within the enclosure.
2. Externally - Disconnect the SMA screw connection and route the cable through any of the cabinet push-out plugs and fix to a smooth surface.

Wire the Caller ID reader colour for colour to a Net2 ACU reader port within a maximum cable length of 15 metres. Belden 9540 is recommended for all data cable wiring.

If a token reader is also fitted, it is connected to the Caller ID's own reader port within a maximum cable length to the Net2 ACU of 100 metres.

Power up the unit and confirm that the Power LED comes on. The Network LED will come on within a few minutes once the unit is active on its GSM network.

Adding the user's phone to a Net2 user record

Set the reader operating mode in the Net2 software to 'Paxton Reader' and the Operating mode to 'Token only'

Enter the last 8 digits of the phone number into the Net2 user record as the token number.
A phone number of 0777 123 456 becomes 77123456 as a Net2 token.

Specifications			
Features	Min	Max	
Phones supported			Caller ID enabled
Carrier frequency			Quad band GSM
Electrical			
Voltage - Reader module	10V DC	14V DC	
Current - Reader module		500 mA	
Additional power supply required			No
Cable length between ACU and Caller ID reader		15 m	
Environment			
Operating temperature	- 20 °C	+ 55 °C	
Waterproof			No
Dimensions	Width	Height	Depth
	200 mm	200 mm	75 mm

CE

The declaration of conformity is available on request. Contact details are provided at: http://paxton.info/596

Paxton Access Ltd hereby declares that this product is in conformity with all the essential requirements of Directive 1999/5/EC. This equipment is intended for use in all EU and EFTA countries and all other countries worldwide.